Swarm Construction Coordinated through the Building Material

Yating Zheng[1,2], Michael Allwright[2], Weixu Zhu[2], Majd Kassawat[3], Zhangang Han[1], and Marco Dorigo[2]
[1] SSS, Beijing Normal University, Beijing, China
[2] IRIDIA, Université Libre de Bruxelles, Brussels, Belgium
[3] Universitat Jaume I, Castellon, Spain

SUMMARY

We present three scenarios that show how the efficiency and the flexibility of a building process in a swarm robotics construction system can be improved by moving the intelligence that coordinates construction into a building material consisting of blocks that can communicate with each other. In our paper, we compare this approach with a standard approach where the construction is coordinated exclusively through stigmergic communication. These scenarios are as follows.

Dynamic construction paths:
A controller block decides how construction should advance and communicates this to the robots using LEDs on the blocks. The controller block can update the LEDs during construction based on external or internal conditions to adjust how the structure is built while it is being built.

Guided construction:
The controller block guides the robot towards vacant construction sites to reduce the time spent searching for them.

Flexible construction:
The controller block is used to enable parallel construction without the need for complex construction rules to cover all the possible intermediate construction states.

CONTACT

[Yating ZHENG]
[IRIDIA, Université Libre de Bruxelles, Brussels, Belgium]
[Yating.Zheng@ulb.ac.be]

SWARM ROBOTICS SYSTEM

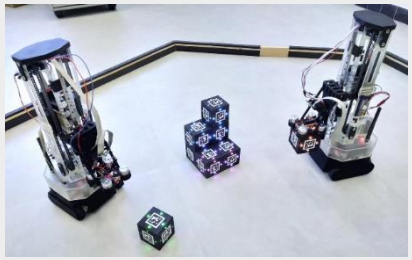

STIGMERGIC BLOCK

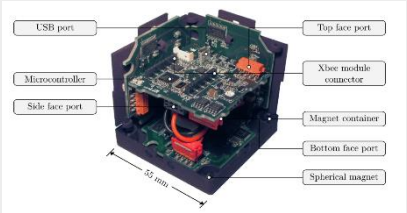

A stigmergic block has a microcontroller, NFC on each face board, and LEDs to light blue, green, purple and red.

EXPERIMENTAL RESULTS

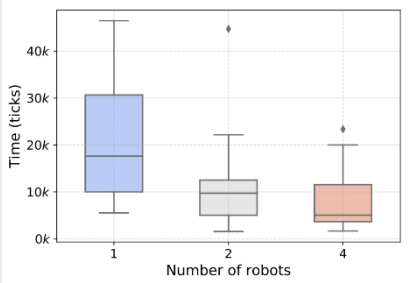

Figure 1. Time steps taken by different number of robots in dynamic construction paths experiment.

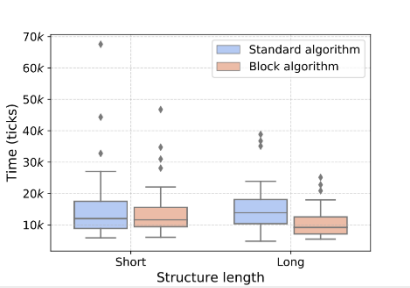

Figure 2. Time steps taken by different types of algorithms in guided construction system.

DYNAMIC CONSTRUCTION PATHS

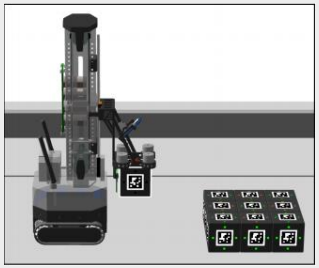

(1) A robot approaches a partially built structure and places a block on top of one of the orange faces.

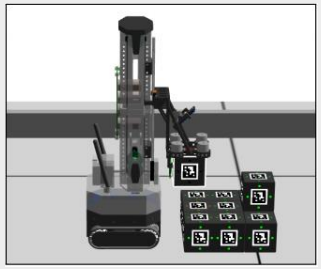

(2) The root block responds by selecting a construction path, changing the illumination pattern.

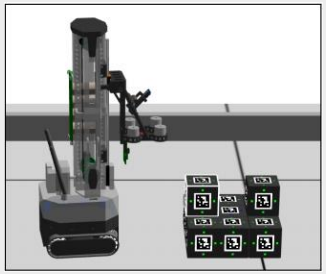

(3) The robot places the final block in the correct location to complete the structure.

GUIDED CONSTRUCTION

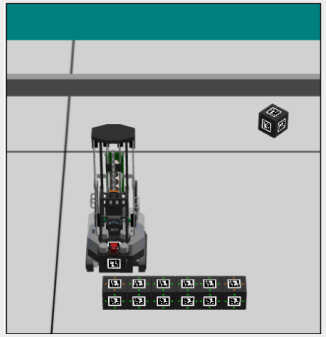

(1) The robot attaches a block to the top of the leftmost block.

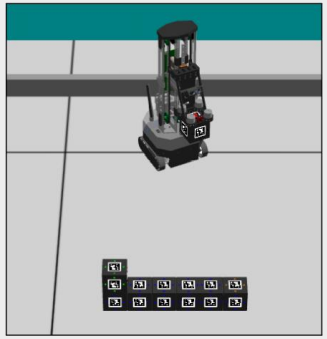

(2) The illumination pattern is updated by the root block and robot searches to the right for possible construction sites.

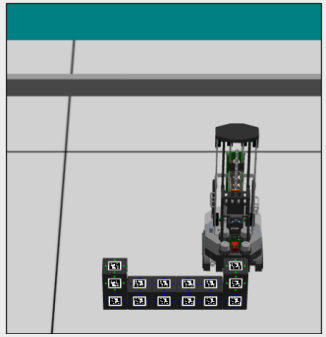

(3) The robot attaches the last block to the top of the rightmost block.

FLEXIBLE CONSTRUCTION

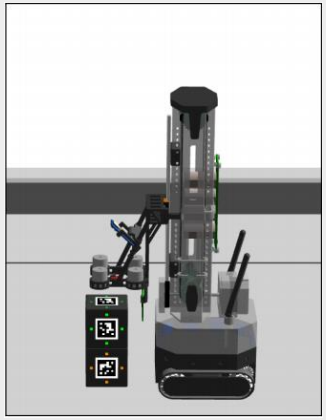

(1) The robot attaches a block to the top.

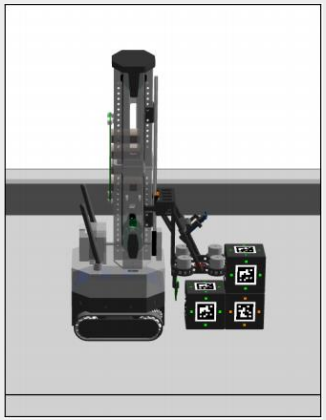

(2) The robot attaches a block in the front.

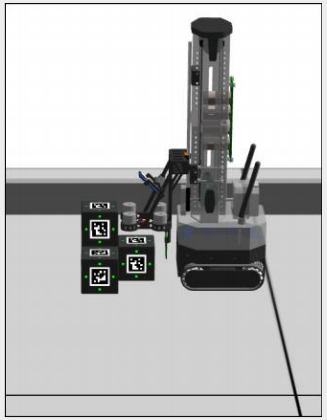

(3) The robot attaches a block in the front.